Ye Zee News

Issue # 12
JUNE 1985

Registered By Australian Post
Publication No. SBC0711

Return Address
30 Seventh ave. Cheltenham S.A. 5014

COMMUNICATIONS REGION

This is an incomplete 'map' of the communications region. It may have a few errors because it comes from a number of different souces. I am including it because I feel some incomplete information is far more use than no information.

30720-22	RST 8 vector
23-25	RST 10 vector
26-28	RST 18 vector
29-31	RST 20 vector
32-34	RST 28 vector set to RTN
35-37	RST 30 ? set to RTN
38-40	RST 38 vector set to DI,RTN
30741-48	keyboard DCB
49-56	??video DCB also used in save/load eg. 30750 & 51 start of tape load address
30757-64	printer DCB
30765-73	??? DOS exits
30774-78	used by keyboard scan routine
30779	copy of output latch
30781-83	???
30784-812	not used ?? by VZ
30813-45	used during ROM start up not used in normal operation ??
30846-47	???
30848-61	used by BASIC division routine
30862-63	USR routine address
64-66	random number seed
67-72	???
73	last char. typed after BREAK
76	output device 0=video 1-printer 255=cas.
30880-81	pointer string area boundary
82-83	current BASIC line number
84-85	program stack pointer
86	curser position
30892-93	last random number
97-98	pointer top of memory
30899-900	next available address in LSPT
901-930	LSPT literal string pool table used for interim string storage

```
30936-37   pointer last executed BASIC byte
   38-39   line # of last DATA statement

30977-31002 variable default type table

31003       0=no trace  1=trace

31004-22    used for BASIC arithmetic
   24-49    25 byte print buffer
   50-57    used for double precission

31058-31138 vector for DOS BASIC tokens
            all set to jump to disc error mesage

31142-31207 vectors, purpose unknown
            all set to RTN

31208-31272 BASIC line buffer

31273-31388  ?????

31389-31404 name of tape being loaded
31447-31462 used by tape load routine
```

SEE PAGE 3 FOR TEXT

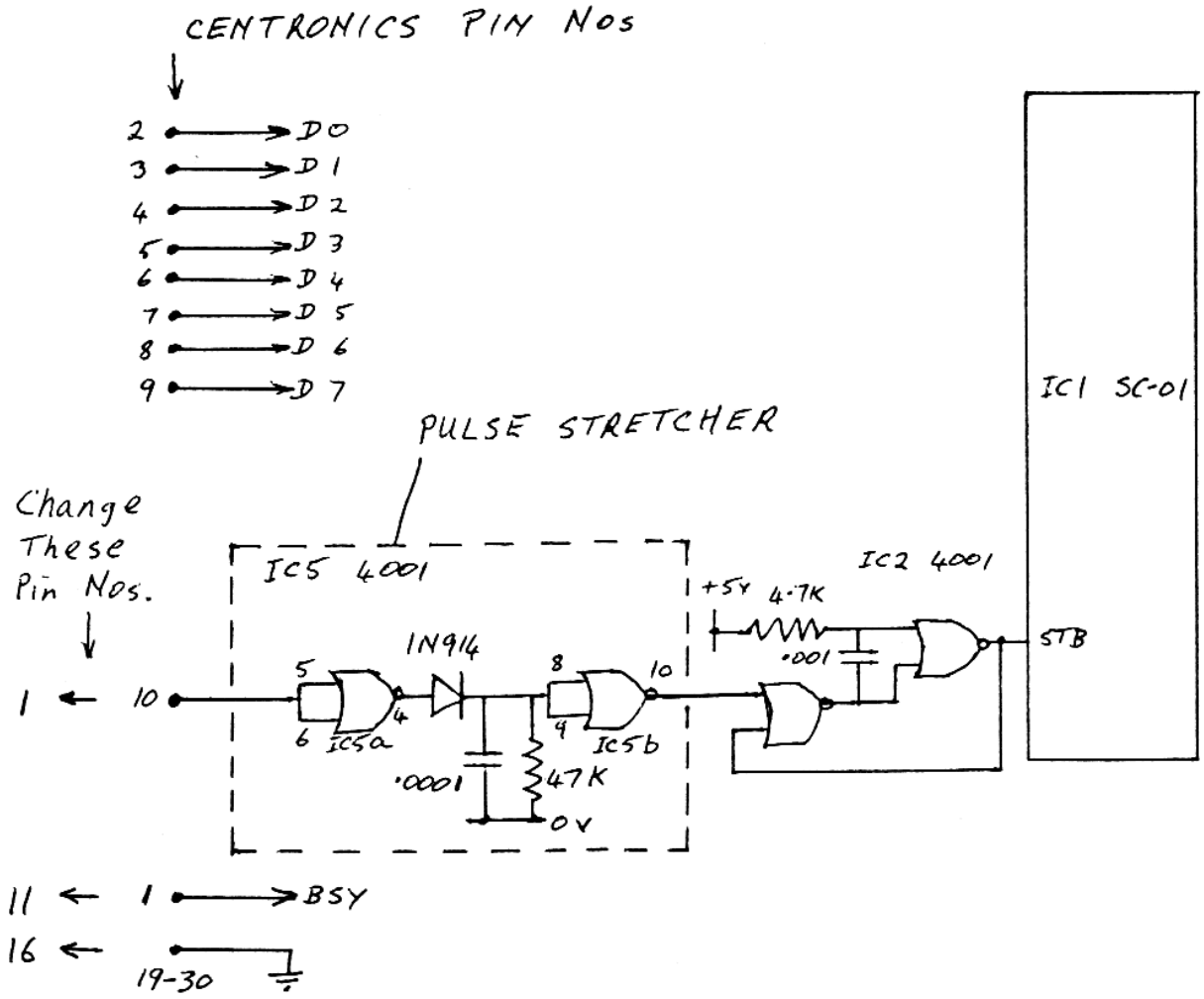

This is the project mentioned last month. I have included it because it is based on a readily available kit and might interest those who are not prepared to "go it alone" with Dave & Lou's home grown voice synthesizer. The following is quoted from Terry Tresidder's letter.

I recently purchased the "Chatterbox" speech synthesizer kit described in the January '85 ETI (ETI project 677). After some initial problems I was able to successfully interface it with the VZ200 and get it operating. As your readers may be interested in this kit I will describe the problems I encountered and how they were overcome.

Problem 1

The article indicates that the synthesizer can be driven from a Centronics style interface and gives appropriate pin connections for same. The VZ Printer interface has a similar style parallel port, so the obvious thing to do was to make use of it. A check on pin connections seemed prudent. Disassembly of the interface unit revealed that 2 pin numbers in the synthesizer needed to be changed (see diagram). These are:

a) The STROBE input on centronics pin 10 has to be changed to pin 1.
b) The BSY output on centronics pin 1 has to be changed to pin 11
c) A GND connection has to be taken to pin 16

Problem 2

Initial connection of the synthesizer to the VZ200 produced a continuous "AAAAH" sound which could not be stopped. It seemed that the strobe circuit was not working. Investigation revealed that the strobe circuit would not respond to any strobe pulse less than 2 microseconds wide. The pulse generated by the printer interface is less than 1 microsecond, hence no response. The solution was to stretch the pulse with a little additional circuitry. This is shown in the diagram. This is not the optimum solution, but it works.

Problem 3

Theoretically the synthesizer should work by using the LPRINT command, but I couldn't get it to work. I suspect software/hardware timing problems introduced by the combined strobe input circuitry. I had more success by treating the interface unit as an I/O port. The interface will work with any port number from 0 to 15. In last months listing I used port number 0 for both input and output.

Before outputting each byte of phoneme data it is necessary to check the BUSY/READY status of the synthesizer IC. The interface unit puts this onto bit "0" of the data bus during an INP command, hence line 80 in the listing. If bit "0" is 1 the synthesizer is busy, if it is 0 it is ready to accept new data.

The value 255 terminates the data for each phrase. When the program encounters this value it asks for another phrase number.

P.S. I used the VZ printer power supply to power the synthesizer.

HARDWARE FIENDS

If you are "into" hardware modifications like add-on memory, keyboards I/O ports etc. this may interest you. Dave Boyce is interested in hearing from people involved in hardware mods to the VZ 200. He has suggested that perhaps an occasional meeting could be arranged. Contact Dave on 384 6574.